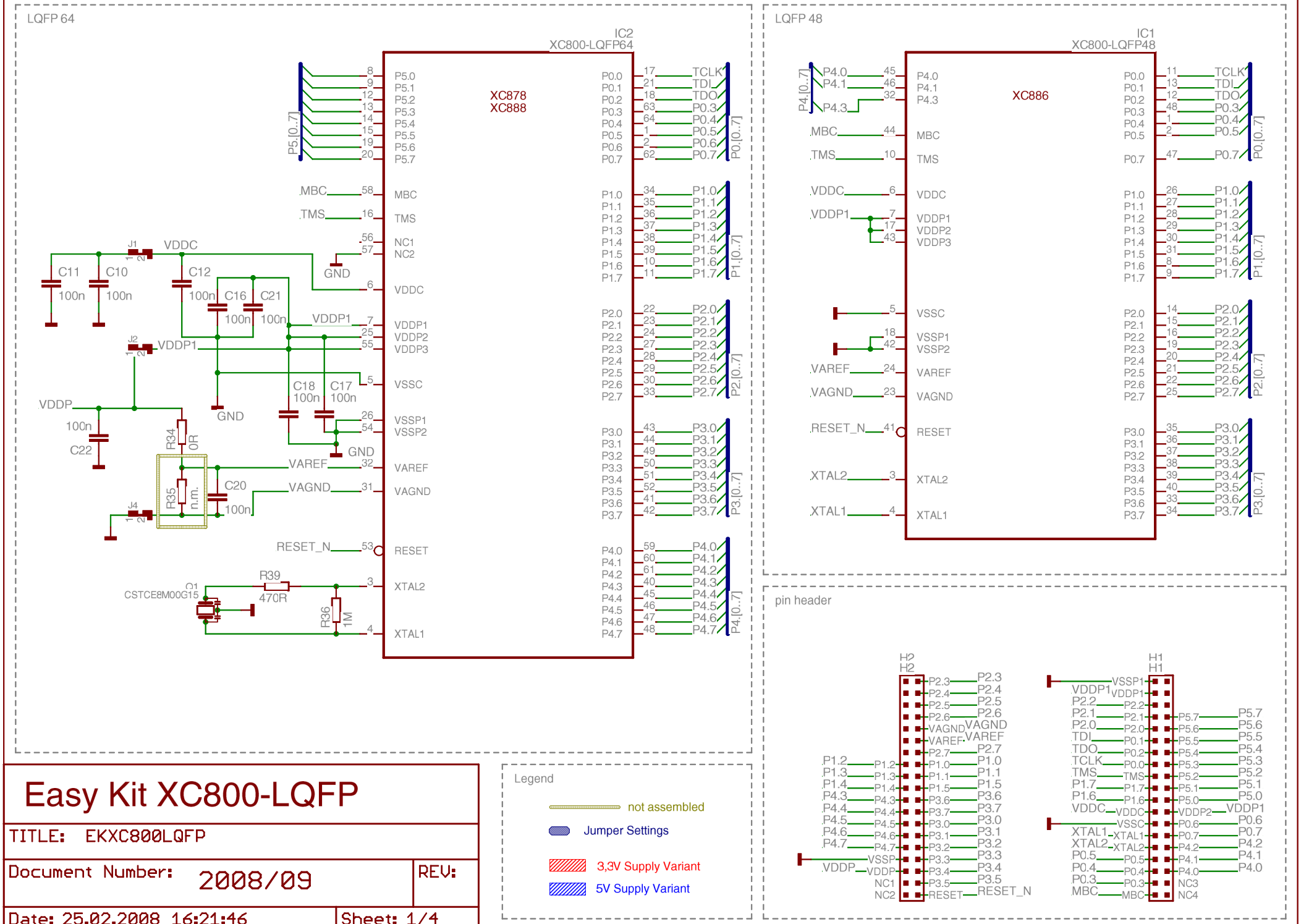
LQFP 64
IC2
XC800-LQFP64
XC878
XC888
LQFP 48
IC1
XC800-LQFP48
XC886
pin header
Legend
not assembled
Jumper Settings
3,3V Supply Variant
5V Supply Variant
Easy Kit XC800-LQFP
TITLE: EKXC800LQFP
Document Number: 2008/09
REV:
Date: 25.02.2008 16:21:46
Sheet: 1/4

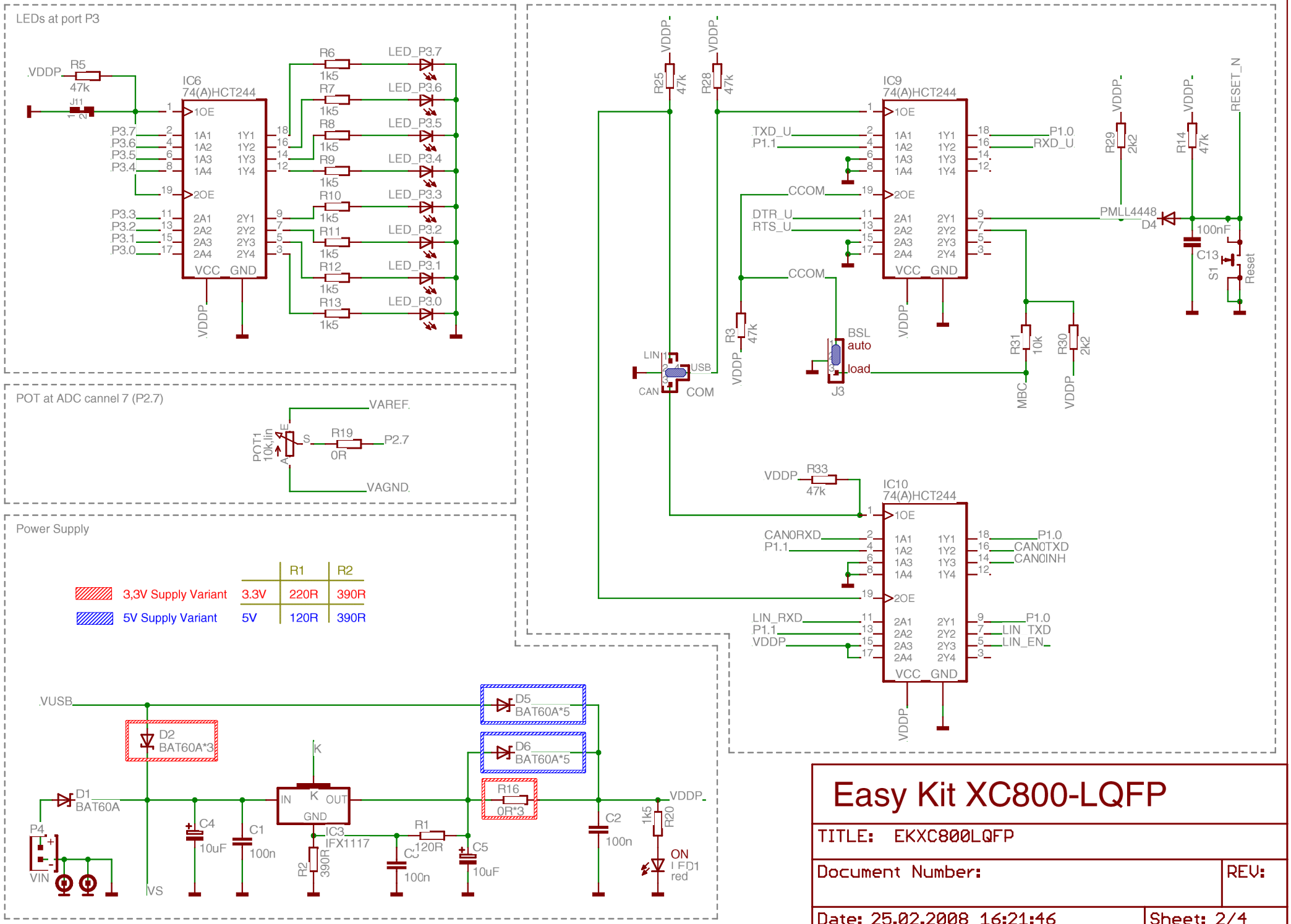
LEDs at port P3
VDDP
R5
47k
J11
IC6
74(A)HCT244
1OE
2OE
1A1
1A2
1A3
1A4
1Y1
1Y2
1Y3
1Y4
2A1
2A2
2A3
2A4
2Y1
2Y2
2Y3
2Y4
VCC
GND
P3.7
P3.6
P3.5
P3.4
P3.3
P3.2
P3.1
P3.0
R6
R7
R8
R9
R10
R11
R12
R13
1k5
LED_P3.7
LED_P3.6
LED_P3.5
LED_P3.4
LED_P3.3
LED_P3.2
LED_P3.1
LED_P3.0
POT at ADC cannel 7 (P2.7)
VAREF
POT1
10k,lin
R19
0R
P2.7
VAGND
Power Supply
3,3V Supply Variant
5V Supply Variant
R1
R2
3.3V
220R
390R
5V
120R
390R
VUSB
D2
BAT60A*3
D1
BAT60A
P4
VIN
VS
C4
10uF
C1
100n
IC3
IFX1117
IN
K
OUT
GND
R2
390R
R1
120R
C3
100n
C5
10uF
D5
BAT60A*5
D6
BAT60A*5
R16
0R*3
C2
100n
VDDP
R20
1k5
ON
LED1
red
R25
47k
R28
47k
IC9
74(A)HCT244
TXD_U
P1.1
P1.0
RXD_U
CCOM
DTR_U
RTS_U
R29
2k2
R14
47k
PML4448
D4
100nF
C13
S1
Reset
RESET_N
R3
47k
LIN
USB
CAN
COM
BSL
auto
load
J3
R31
10k
R30
2k2
MBC
R33
47k
IC10
74(A)HCT244
CAN0RXD
CAN0TXD
CAN0INH
LIN_RXD
LIN_TXD
LIN_EN
Easy Kit XC800-LQFP
TITLE: EKXC800LQFP
Document Number:
REV:
Date: 25.02.2008 16:21:46
Sheet: 2/4

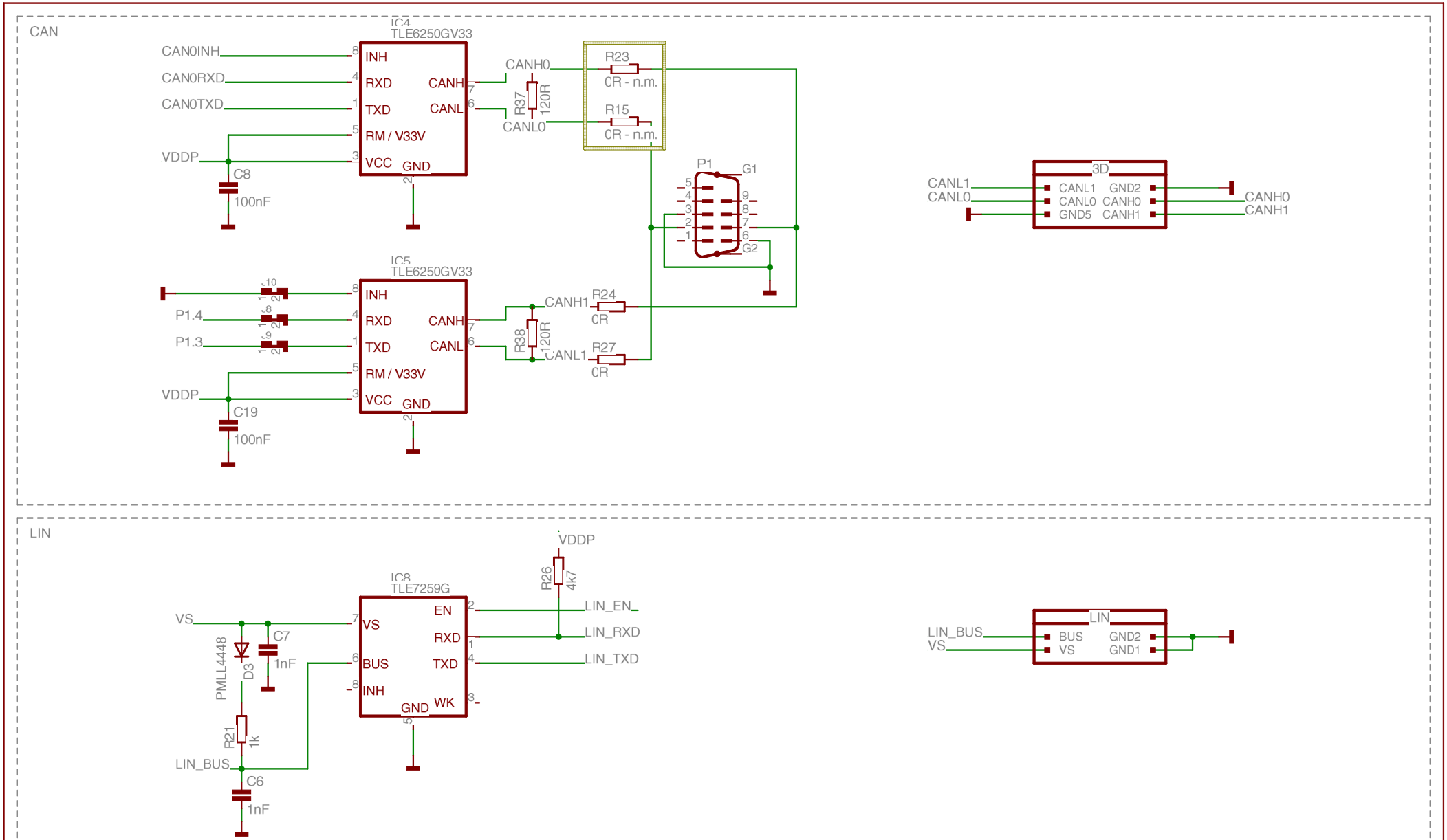

Easy Kit XC800-LQFP

TITLE: EKXC800LQFP	
Document Number:	REV:
Date: 25.02.2008 16:21:46	Sheet: 3/4

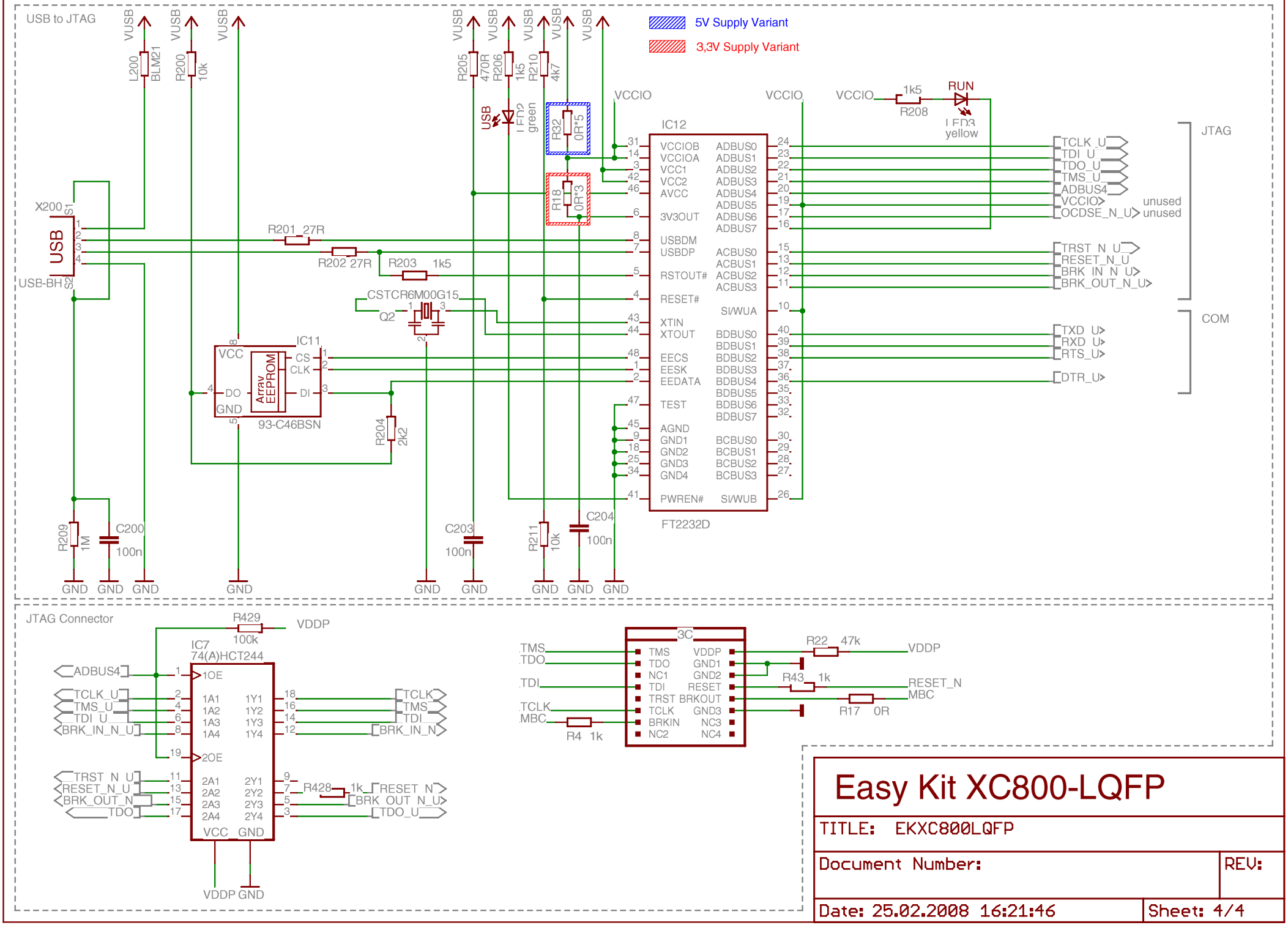
USB to JTAG
5V Supply Variant
3,3V Supply Variant
IC12
FT2232D
IC11
93-C46BSN
IC7
74(A)HCT244
JTAG
COM
JTAG Connector
Easy Kit XC800-LQFP
TITLE: EKXC800LQFP
Document Number:
REV:
Date: 25.02.2008 16:21:46
Sheet: 4/4